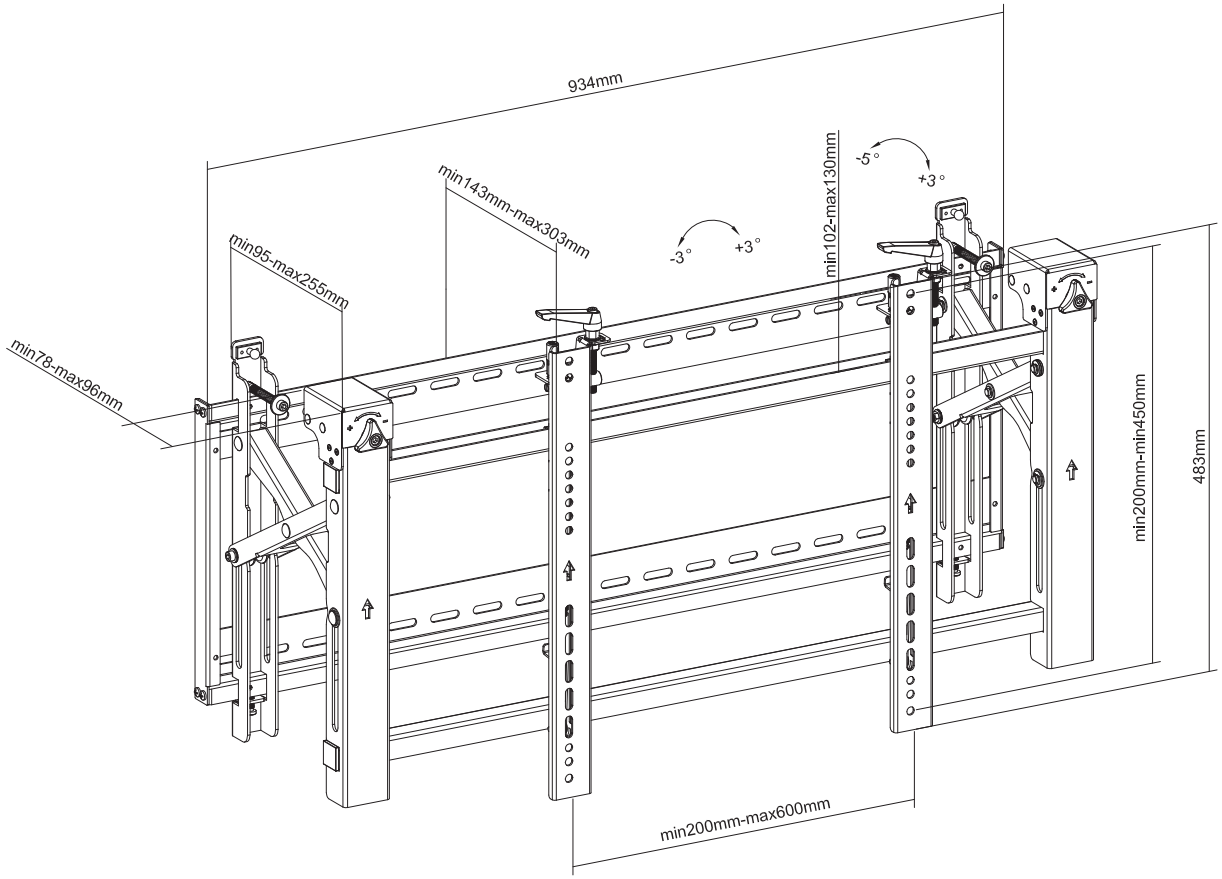

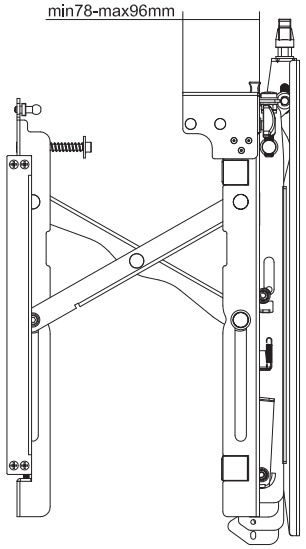

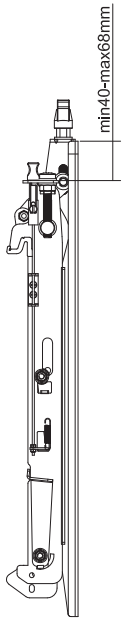

Measuring unit: mm